MCSS series

SLIDE CYLINDER

mindman

Features

- High precision combination of cylinder and linear rail.
- Flush fitting sensor groove.
- Magnetic as standard.

Specification

Model	MCSS		
Acting type	Double acting		
Tube I.D. (mm)	6	8, 12, 16	20, 25
Port size	M3×0.5	M5×0.8	Rc1/8
Medium	Air		
Operating pressure range	0.15~0.7 MPa		
Proof pressure	1 MPa		
Ambient temperature	-5~+60°C (No freezing)		
Lubricator	Not required		
Available speed range	50~500 mm/sec		
Cushion	Rubber bumper (Standard) Shock absorber (Option)		
Sensor switch (*)	RCE, RCE1, RDEP		

* RCE, RCE1, RDEP specification, please refer to page 8-10, 14.

Table for standard stroke

Tube I.D.	Stroke (mm)
ø6	10, 20, 30, 40, 50
ø8	10, 20, 30, 40, 50, 75
ø12	10, 20, 30, 40, 50, 75, 100
ø16	10, 20, 30, 40, 50, 75, 100, 125
ø 20, 25	10, 20, 30, 40, 50, 75, 100, 125, 150

Order example

MCSS — 20 L — 50 — AS — X12 — □

MODEL

TUBE I.D.

L
Blank: Standard
L: Symmetric style

STROKE

STROKE ADJUSTER
Blank: Without adjuster
AS: Adjuster at extension end
AT: Adjuster at retraction end
A: Adjuster at both ends
BS: Absorber at extension end
BT: Absorber at retraction end
B: Absorber at both ends
AB: Adjuster at extension end+Absorber at retraction end
BA: Absorber at extension end+Adjuster at retraction end

ADJUSTABLE RANGE
Blank: 5mm
X11: 15mm
X12: 25mm
(Only for stroke adjuster)

PORT THREAD
Blank: M thread
(for ø6~ø16)
Blank: Rc thread
G: G thread
NPT: NPT thread
(for ø20,ø25)

*X12 (adjustable range: 25mm) is not available for MCSS-6.
*X11 and X12 are not available for shock absorber type.
*Shock absorber is not available on series MCSS-6.

Stroke adjuster option

Stroke adjuster

- Adjustable stroke range: 0~5mm (Standard)

AS: Adjuster at extension end
AT: Adjuster at retraction end
A: Adjuster at both ends

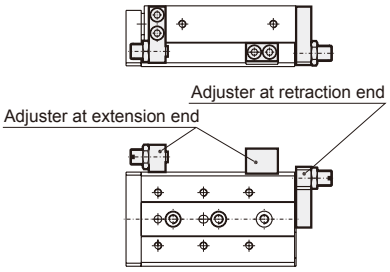

With shock absorber

- Enables adjustment of stroke.
- Absorbs the collision at stroke end and stops smoothly.

BS: Absorber at extension end
BT: Absorber at retraction end
B: Absorber at both ends

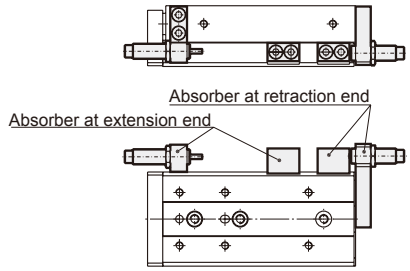

Theoretical force

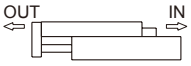

Unit: N

Tube I.D. (mm)	Piston rod (mm)	Operating direction	Piston area (mm^2)	Operating pressure (MPa)					
				0.2	0.3	0.4	0.5	0.6	0.7
6	3	OUT	57	11	17	23	29	34	40
		IN	42	8	13	17	21	25	29
8	4	OUT	101	20	30	40	51	61	71
		IN	75	15	23	30	38	45	53
12	6	OUT	226	45	68	90	113	136	158
		IN	170	34	51	68	85	102	119
16	8	OUT	402	80	121	161	201	241	281
		IN	302	60	91	121	151	181	211
20	10	OUT	628	126	188	251	314	377	400
		IN	471	94	141	188	236	283	330
25	12	OUT	982	196	295	393	491	589	687
		IN	756	151	227	302	378	454	529

Model selection steps	Formula / Data	Selection example
1. Operating conditions List the operating conditions considering the mounting position and workpiece configuration. Check that the load weight does not exceed the max. allowable load weight and that the average operating speed does not exceed the operating speed range.	• Model to be used. • Type of cushion. • Workpiece mounting position. • Average operating speed Va (mm/s) • Load mass W (kg): Fig 1, Table 2 • Overhang Ln(mm): Fig 2	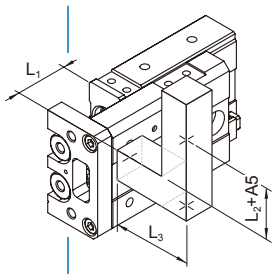 Cylinder: MCSS-6-10 Cushion: Rubber bumper Workpiece table mounting Mounting: Horizontal wall mounting Average operating speed: Va = 150 mm/s Load mass: W = 0.3 kg L_1 = 4mm L_2 = 4mm L_3 = 5mm
2. Kinetic energy Find the kinetic energy E (J) of the load. Find the allowable kinetic energy Ea (J). Confirm that the kinetic energy of the load does not exceed the allowable kinetic energy.	$E = \frac{1}{2} \cdot W \left(\frac{V}{1000}\right)^2$ Collision speed V = 1.4* • Va * Correction factor (Reference values) Ea = K • Emax Workpiece mounting coefficient K: Fig 3 Max. allowable kinetic energy Emax: Table 1 Kinetic energy (E) ≤ Allowable kinetic energy (Ea)	$E = \frac{1}{2} \cdot 0.3 \left(\frac{210}{1000}\right)^2 = 0.0066$ V = 1.4 • 150 = 210 Ea = 1 • 0.015 = 0.015 Can be used based on E = 0.0066 ≤ Ea = 0.015

(Continued)

Table 1: Max. allowable kinetic energy: Emax (J)

Tube I.D. (mm)	Allowable kinetic energy	
	Rubber bumper	Shock absorber
ø6	0.015	–
ø8	0.023	0.041
ø12	0.05	0.105
ø16	0.104	0.214
ø20	0.153	0.313
ø25	0.232	0.472

Fig 1: Load mass: W (kg)

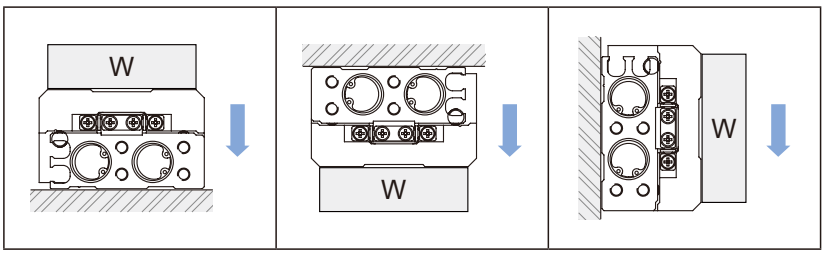

Table 2: Max. allowable load mass: Wmax (kg)

Tube I.D. (mm)	Max. allowable load mass
ø6	0.6
ø8	0.8
ø12	2
ø16	3.7
ø20	6
ø25	8.5

Fig 2: Overhang: Ln (mm), Correction value of moment center position distance: An (mm)

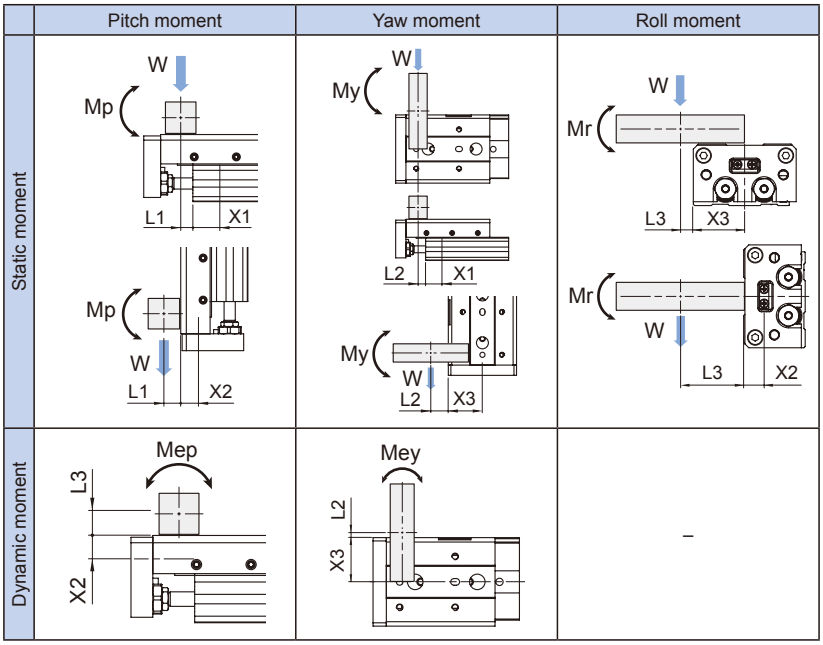

Fig 3: Workpiece mounting coefficient: K

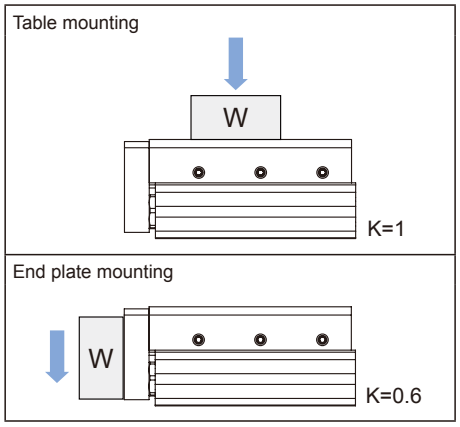

Model selection steps	Formula / Data	Selection example
3. Load factor		
3-1 Load factor of load mass Find the allowable load mass Wa (kg). Note: There is no need to consider this load factor in the case of using perpendicularly in a vertical position. (Define $\alpha_1 = 0$.) Find the load factor of the load mass α_1.	$Wa = K \cdot \beta \cdot Wmax$ Workpiece mounting coefficient K: Fig 3 Allowable load mass coefficient β: Fig 4 Max. allowable load mass Wmax: Table 2 $\alpha_1 = W/Wa$	$Wa = 1 \cdot 1 \cdot 0.6 = 0.6$ K = 1 β = 1 Wmax = 0.6 $\alpha_1 = 0.3/0.6 = 0.5$
3-2 Load factor of static moment Find the static moment M (N·m). Find the allowable static moment Ma (N·m). Find the load factor α_2 of the static moment.	$M = W \cdot 9.8(Ln+Xn) / 1000$ Correction value of moment center position distance Xn: Table 3 $Ma = K \cdot \gamma \cdot Mmax$ Workpiece mounting coefficient K: Fig 3 Allow load mounting coefficient γ: Fig 4 Max. allowable moment Mmax: Table 4 $\alpha_2 = M/Ma$	Yawing Examine My. $My = 0.3 \cdot 9.8(4+14.5)/1000 = 0.05$ $X_1 = 14.5$ $May = 1 \cdot 1 \cdot 0.7 = 0.7$ Mymax = 0.7 K = 1 γ = 1 $\alpha_2 = 0.05/0.7 = 0.072$ Rolling Examine Mr. $Mr = 0.3 \cdot 9.8(5+6)/1000 = 0.033$ $X_2 = 6$ Mar = 0.7 (Same value as May) $\alpha'_2 = 0.033/0.7 = 0.047$
3-3 Load factor of dynamic moment Find the dynamic moment Me (N·m). Find the allowable dynamic moment Mea (N·m). Find the load factor α_3 of the dynamic moment.	$Me = 1/3 \cdot We \cdot 9.8 \frac{(Ln+Xn)}{1000}$ Correction equivalent to impact $We = \delta \cdot W \cdot V$ δ: Bumper coefficient With urethane bumper (Standard) = 4/100 With shock absorber = 1/100 Correction value of moment center position distance Xn: Table 3 $Mea = K \cdot \gamma \cdot Mmax$ Workpiece mounting coefficient K: Fig 3 Allowable mounting coefficient γ: Fig 4 Max. allowable moment Mmax: Table 4 $\alpha_3 = Me/Mea$	Pitching Examine Mep. $Mep = 1/3 \cdot 2.52 \cdot 9.8 \cdot \frac{(5+6)}{1000} = 0.09$ $We = 4/100 \cdot 0.3 \cdot 210 = 2.52$ $X_2 = 6$ $Meap = 1 \cdot 1 \cdot 0.7 = 0.7$ K = 1 γ = 1 Mpmax = 0.7 $\alpha_3 = 0.09/0.7 = 0.128$ Yawing Examine Mey. $Mey = 1/3 \cdot 2.52 \cdot 9.8 \cdot \frac{(4+16)}{1000} = 0.165$ We = 2.52 $X_3 = 16$ Meay = 0.7 (Same value as Meap) $\alpha'_3 = 0.165/0.7 = 0.235$
3-4 Sum of load factors Possible to use if the sum of the load factors does not exceed 1.	$\Sigma\alpha_n = \alpha_1 + \alpha_2 + \alpha_3 \leq 1$	$\Sigma\alpha_n = \alpha_1 + \alpha_2 + \alpha'_2 + \alpha_3 + \alpha'_3 \leq 1$ $\Sigma\alpha_n = 0.5 + 0.072 + 0.047 + 0.128 + 0.235 = 0.982 \leq 1$ Add it is possible to use.

Table 3: Correction value of moment center position distance: Xn (mm)

Tube I.D. (mm)	X1, Stroke (mm)									X2	X3
	10	20	30	40	50	75	100	125	150		
ø6	14.5	14.5	19	26.5	35.5	–	–	–	–	6	16
ø8	14.5	14.5	19	28.5	35.5	49	–	–	–	8	20
ø12	23.5	23.5	23.5	27.5	33	50.5	68.5	–	–	9.5	25
ø16	22.5	22.5	22.5	26.5	32	51.5	67.5	85	–	10.5	31
ø20	25	25	25	25	32.5	49.5	68.5	88.5	88.5	15.5	38
ø25	24	24	24	24	31.5	51.5	66.5	86.5	91.5	20.5	46

Table 4: Max. allowable moment: Mmax (N·m)

Tube I.D. (mm)	Stroke (mm)								
	10	20	30	40	50	75	100	125	150
ø6	0.7	1	1.1	1.1	1.1	–	–	–	–
ø8	2	2	2.6	3.5	3.9	3.9	–	–	–
ø12	3.9	3.9	3.9	5.5	6.8	9.6	9.6	–	–
ø16	9.8	9.8	9.8	9.8	12	21	30	30	–
ø20	16.4	16.4	16.4	16.4	24.2	31.4	45.5	45.5	45.5
ø25	26.5	26.5	26.5	26.5	37.8	49.8	62.2	62.2	62.2

Fig 3: Workpiece mounting coefficient: K

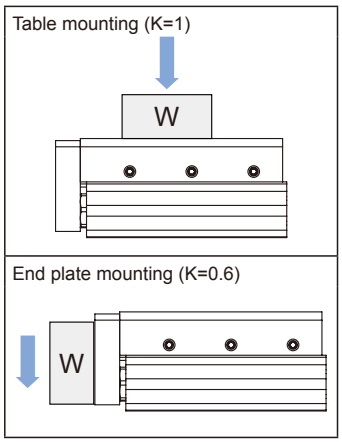

Fig.4: Allowable load mass coefficient: β
Allowable moment coefficient: γ

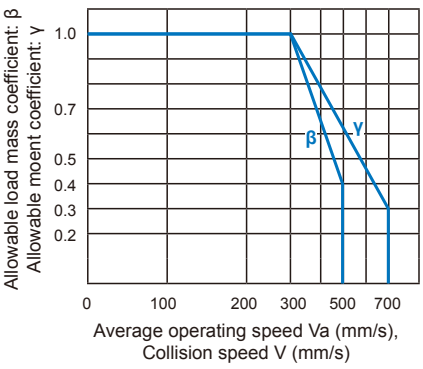

γ note: Use the average operating speed when calculating static moment. Use the collision speed when calculating dynamic moment.

Table deflection (Reference values)

Table displacement due to roll moment load

Table displacement of section A when loads are applied to the section F with theslide table retracted.

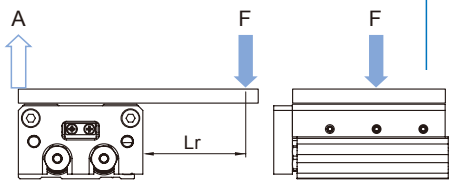

Table displacement due to yaw moment load

Table displacement when loads are applied to the section marked with the arrow at the full stroke.

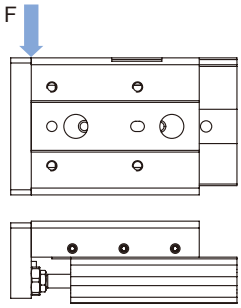

Table displacement due to pitch moment load

Table displacement when loads are applied to the section marked with the arrow at the full stroke.

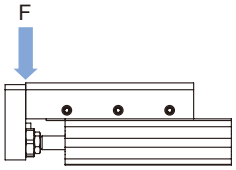

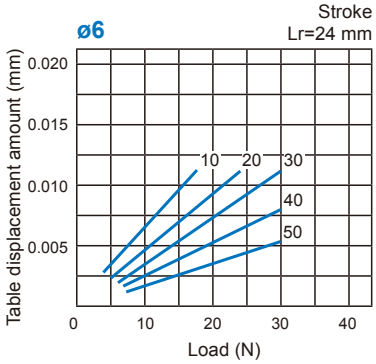

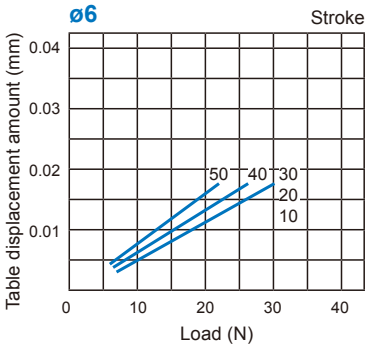

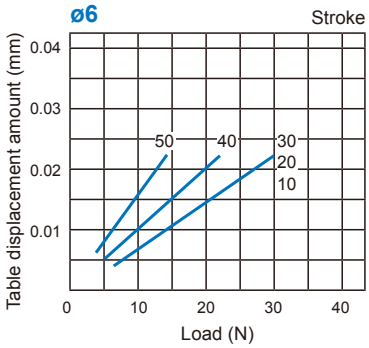

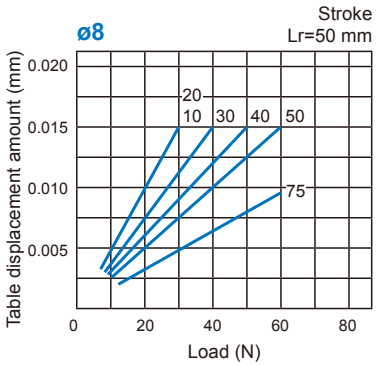

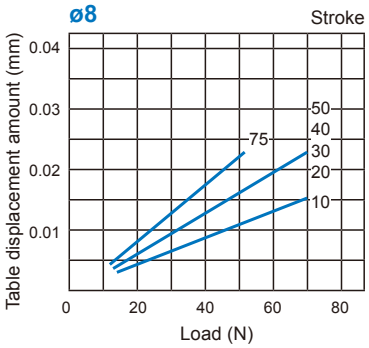

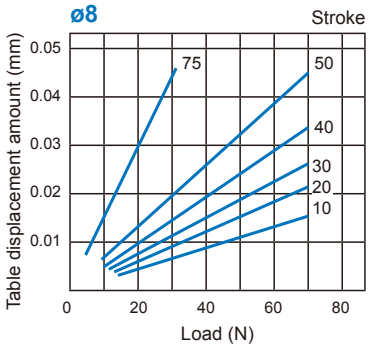

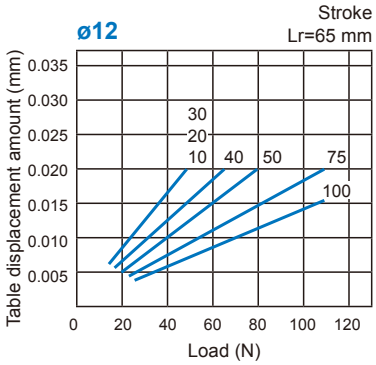

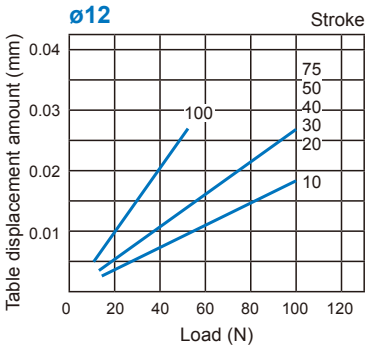

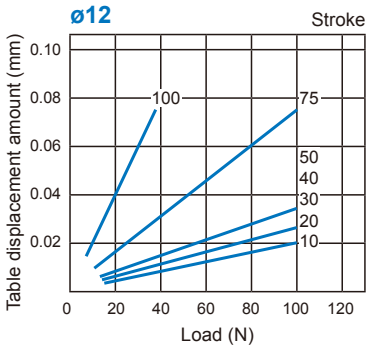

Table deflection (Reference values)

Table displacement due to roll moment load

Table displacement of section A when loads are applied to the section F with theslide table retracted.

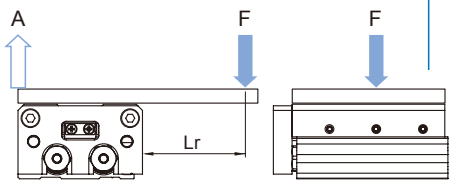

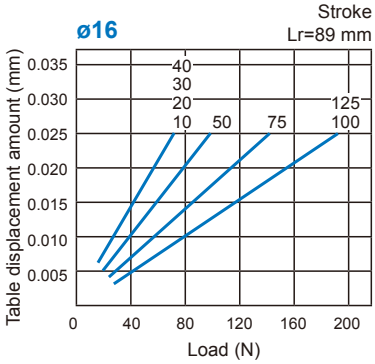

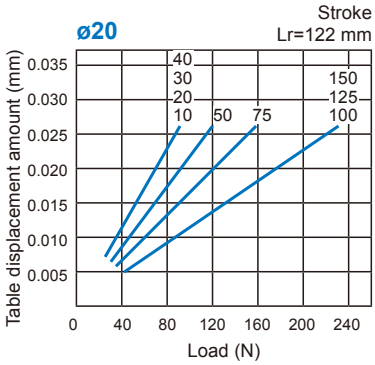

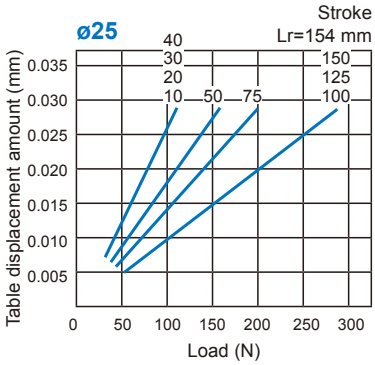

Table displacement due to yaw moment load

Table displacement when loads are applied to the section marked with the arrow at the full stroke.

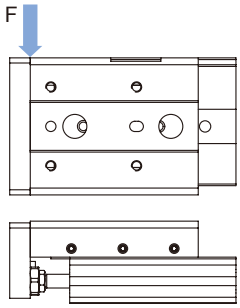

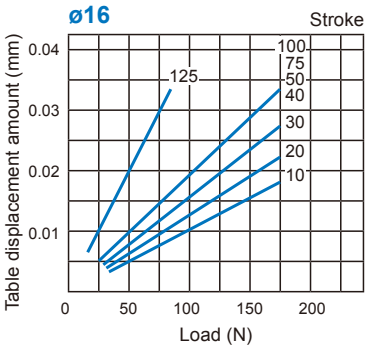

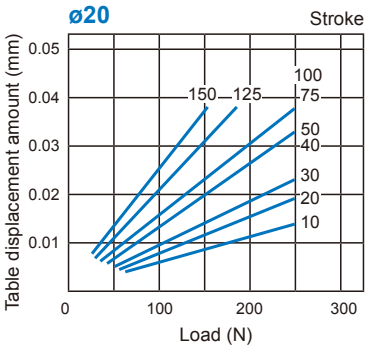

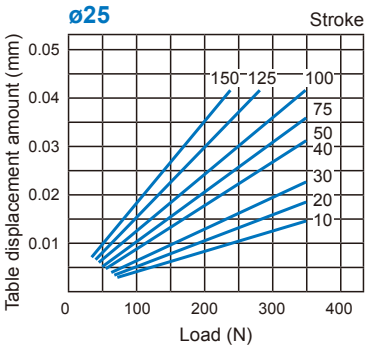

Table displacement due to pitch moment load

Table displacement when loads are applied to the section marked with the arrow at the full stroke.

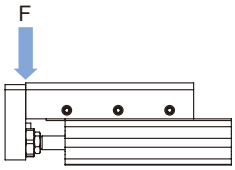

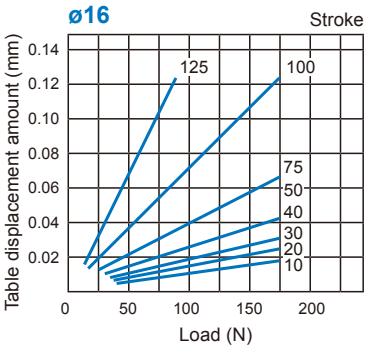

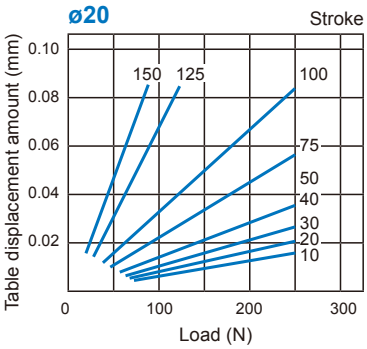

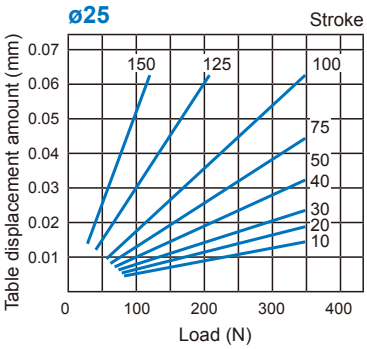

MCSS Inside structure & Parts list

SLIDE CYLINDER

mindman

ø6, ø8

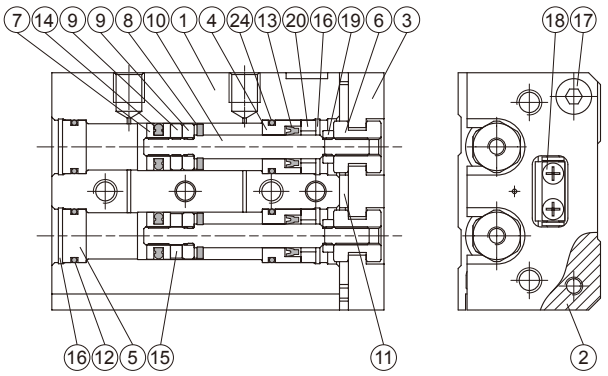

Installation of sensor switch

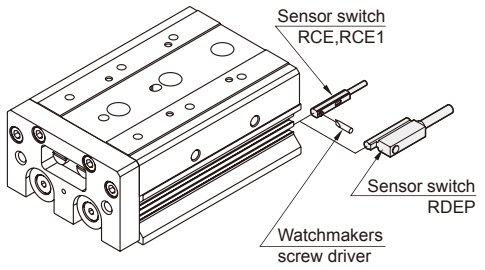

ø12~ø25

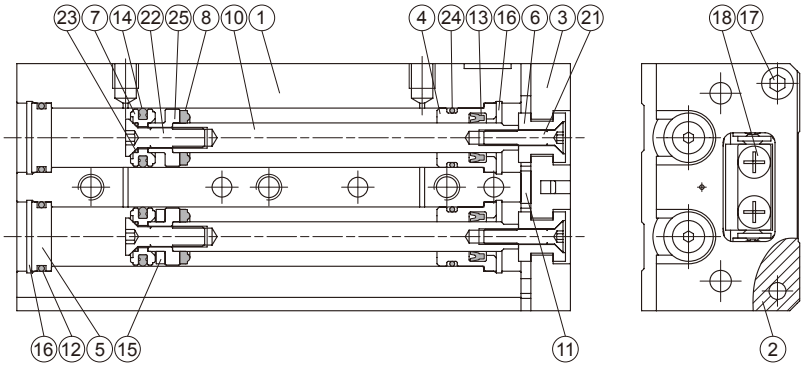

Order example of repair kits

Tube I.D.	Repair kits
ø6	**PS-MCSS-6**
ø8	**PS-MCSS-8**
ø12	**PS-MCSS-12**
ø16	**PS-MCSS-16**
ø20	**PS-MCSS-20**
ø25	**PS-MCSS-25**

Material *1. Aluminum alloy *2. Stainless steel *3. Spring steel

No.	Tube I.D. / Part name	6	8	12~25	Q'y	Repair kits (inclusion)
1	Body	Aluminum alloy			1	
2	Table	Aluminum alloy			1	
3	Plate	Aluminum alloy			1	
4	Rod cover	Aluminum alloy			2	
5	Head cover	Aluminum alloy			2	
6	Floating connector	Stainless steel			2	
7	Piston	Stainless steel		*1	2	
8	Cushion pad	NBR			2	●
9	Spacer ring	*1	*2	—	3	
10	Piston rod	Stainless steel			2	
11	End cushion	PU			1	●
12	Cover ring	NBR			2	●
13	Rod packing	NBR			2	●
14	Piston packing	NBR			2	●
15	Magnet ring	Magnet material			1	
16	Snap ring	*3	Stainless steel		4	
17	Bolt	Stainless steel			2 or 4	
18	Slide way	Bearing steel			1	
19	Nut	Stainless steel		—	2	
20	Rod cover washer	Stainless steel		—	2	
21	Floating connector bolt	—		*2	2	
22	Piston screw	—		*2	2	
23	Piston gasket	—		NBR	2	●
24	Cover ring	NBR			2	●
25	Piston for magnet ring	—		*1	2	

* Item 17. Tube I.D. ø6~16 (Q'y: 2pcs); Tube I.D. ø20, 25 (Q'y: 4pcs).

Cylinder weight

Unit: g

Stroke (mm)	Tube I.D.					
	ø6	ø8	ø12	ø16	ø20	ø25
10	89	155	360	576	1050	1636
20	110	166	362	604	1060	1650
30	122	201	369	602	1092	1673
40	161	246	425	674	1145	1797
50	199	281	529	762	1320	1989
75	–	394	722	1095	1815	2713
100	–	–	960	1410	2365	3260
125	–	–	–	1702	2880	4260
150	–	–	–	–	3368	4530

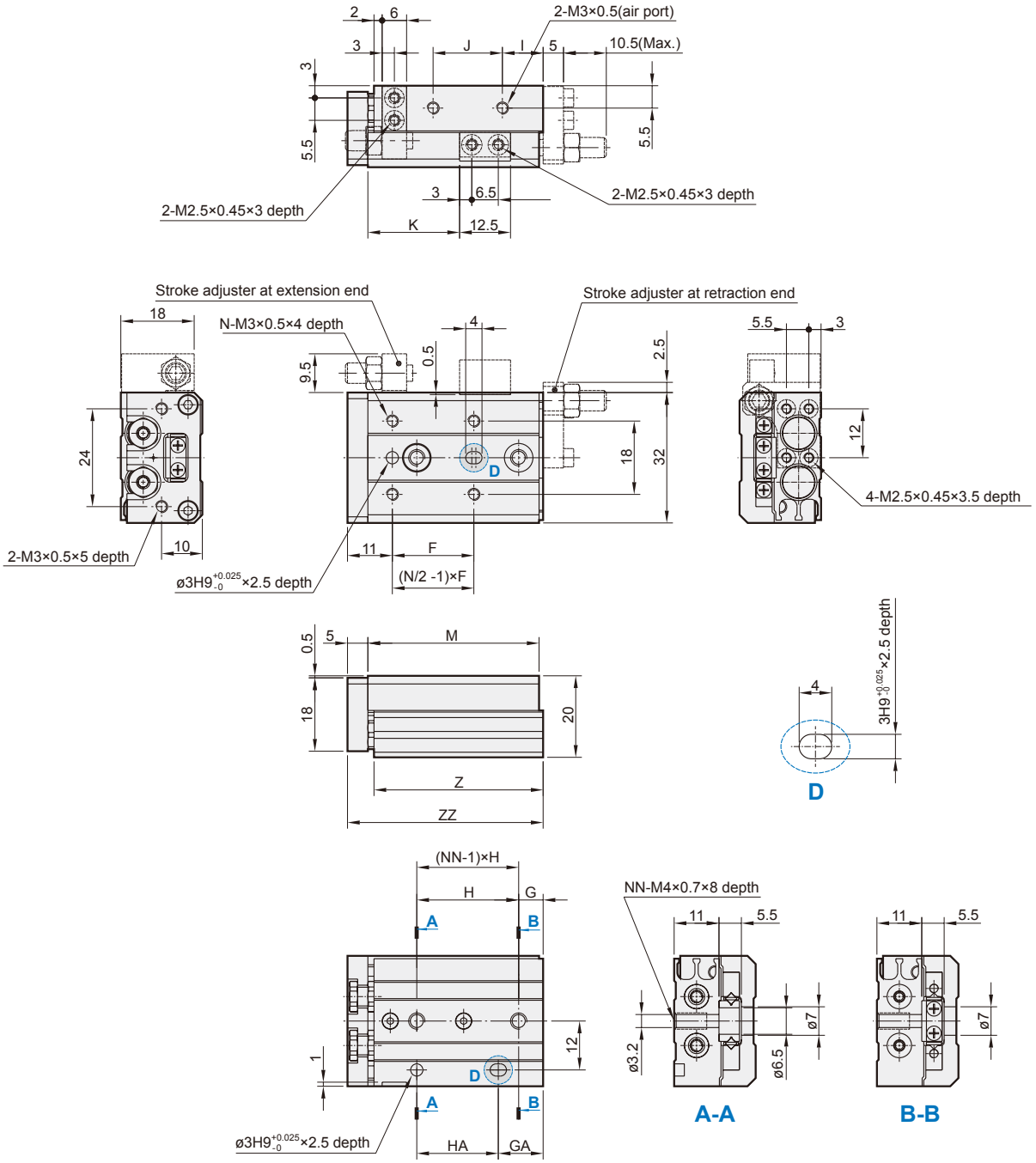

Code / Stroke	F	G	GA	H	HA	I	J	K	M	N	NN	Z	ZZ
10	20	6	11	25	20	10	17	22.5	42	4	2	41.5	48
20	30	6	21	35	20	10	27	32.5	52	4	2	51.5	58
30	20	11	31	20	20	7	40	42.5	62	6	3	61.5	68
40	28	13	43	30	30	19	50	52.5	84	6	3	83.5	90
50	38	17	41	24	48	25	60	62.5	100	6	4	99.5	106

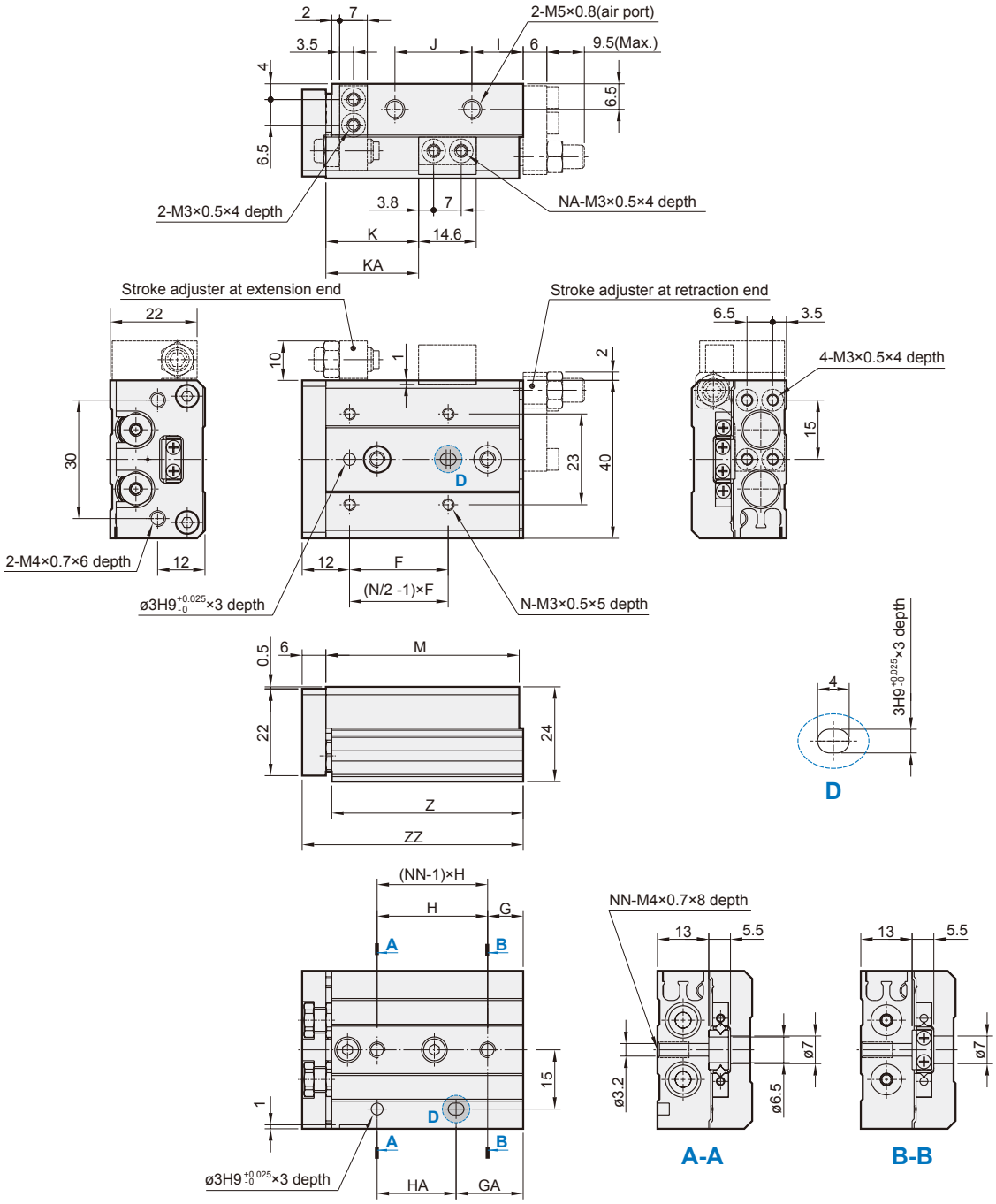

Code / Stroke	F	G	GA	H	HA	I	J	K	KA	M	N	NA	NN	Z	ZZ
10	25	9	17	28	20	13	19.5	23.5	-	49	4	2	2	48.5	56
20	25	12	12	30	30	8.5	29	33.5	-	54	4	2	2	53.5	61
30	40	13	33	20	20	9.5	39	43.5	-	65	4	2	3	64.5	72
40	50	15	43	28	28	10.5	56	53.5	-	83	4	2	3	82.5	90
50	38	20	43	23	46	24.5	60	63.5	82.5	101	6	4	4	100.5	108
75	50	27	83	28	56	38.5	96	88.5	132.5	151	6	4	5	150.5	158

ø8

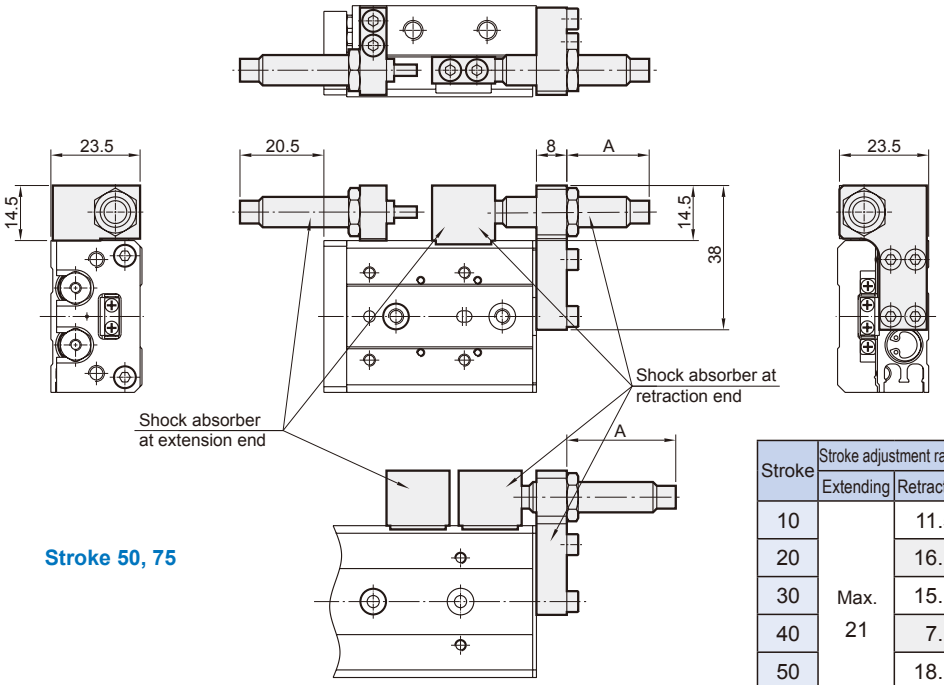

Stroke 50, 75

Stroke	Stroke adjustment range		A dimension (Retracted side mounting)
	Extending	Retracting	
10	Max. 21	11.5	20.1
20		16.1	25.1
30		15.1	24.1
40		7.1	16.1
50		18.1	27.1
75		18.1	27.1

* Other dimensions not indicated are the same as the basic style.

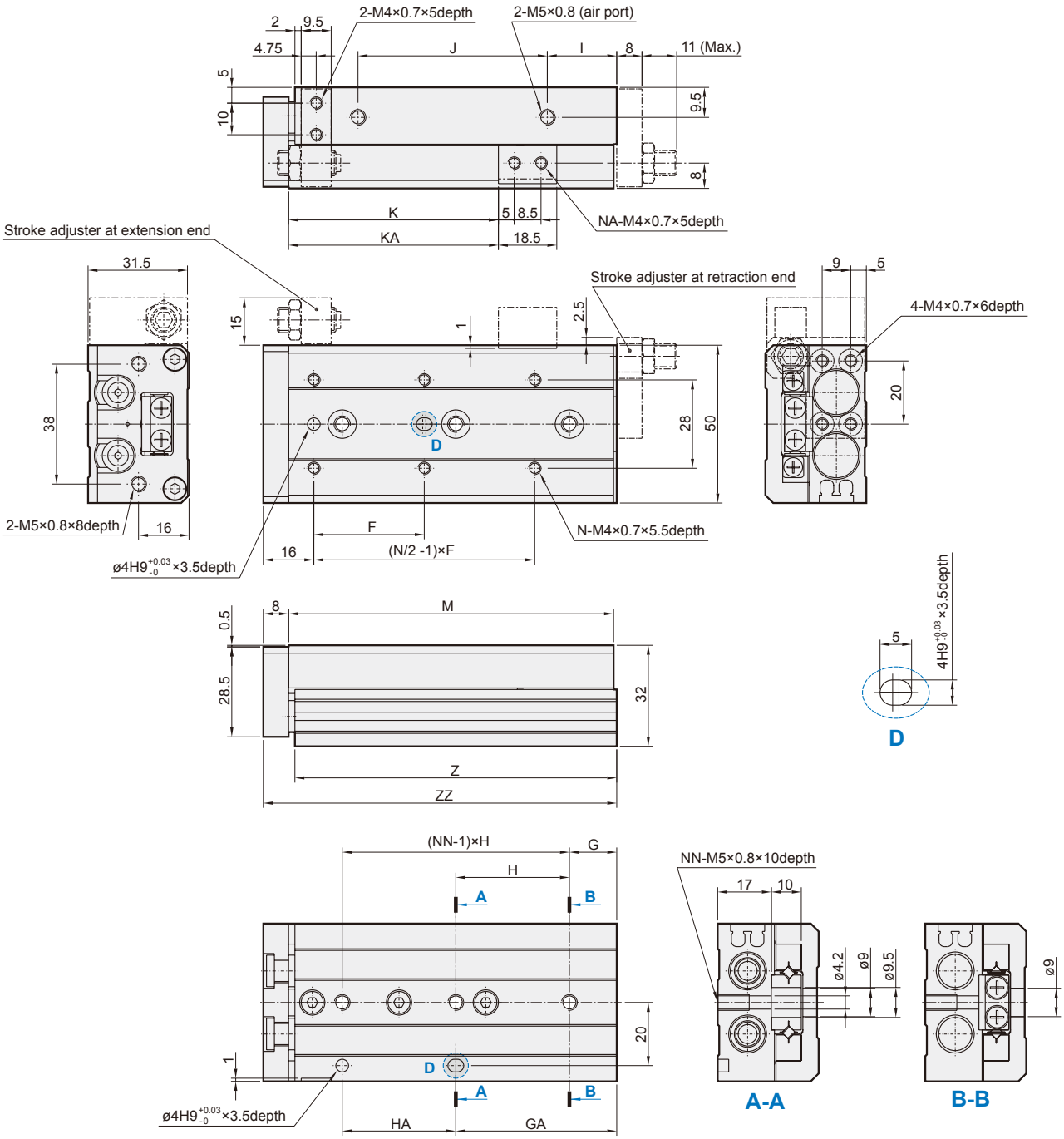

Code / Stroke	F	G	GA	H	HA	I	J	K	KA	M	N	NA	NN	Z	ZZ
10	35	15	15	40	40	10	40	26.5	-	71	4	2	2	70	80
20	35	15	15	40	40	10	40	36.5	-	71	4	2	2	70	80
30	35	15	15	40	40	10	40	46.5	-	71	4	2	2	70	80
40	50	17	42	25	25	10	52	56.5	-	83	4	2	3	82	92
50	35	15	51	36	36	22	60	66.5	-	103	6	2	3	102	112
75	55	25	61	36	72	43	85	91.5	125.5	149	6	4	4	148	158
100	65	35	111	38	76	52	130	116.5	179.5	203	6	4	5	202	212

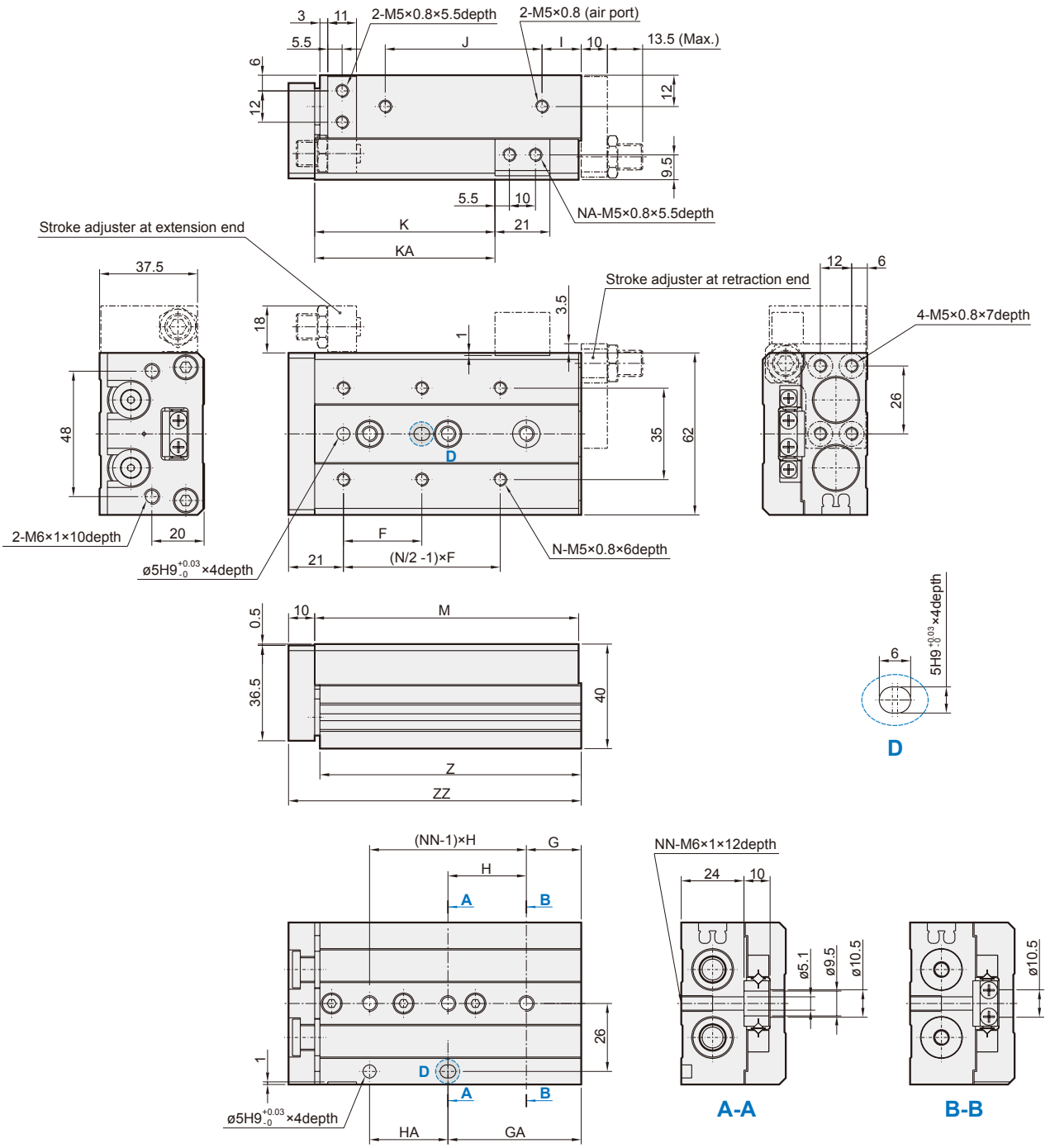

Code / Stroke	F	G	GA	H	HA	I	J	K	KA	M	N	NA	NN	Z	ZZ
10	35	16	16	40	40	10	40	29	-	76	4	2	2	75	87
20	35	16	16	40	40	10	40	39	-	76	4	2	2	75	87
30	35	16	16	40	40	10	40	49	-	76	4	2	2	75	87
40	40	16	16	50	50	10	50	59	-	86	4	2	2	85	97
50	30	21	51	30	30	15	60	69	-	101	6	2	3	100	112
75	55	26	61	35	70	40	85	94	125	151	6	4	4	150	162
100	65	39	109	35	70	55	118	119	173	199	6	4	5	198	210
125	70	19	159	35	70	68	155	144	223	249	8	4	7	248	260

ø12

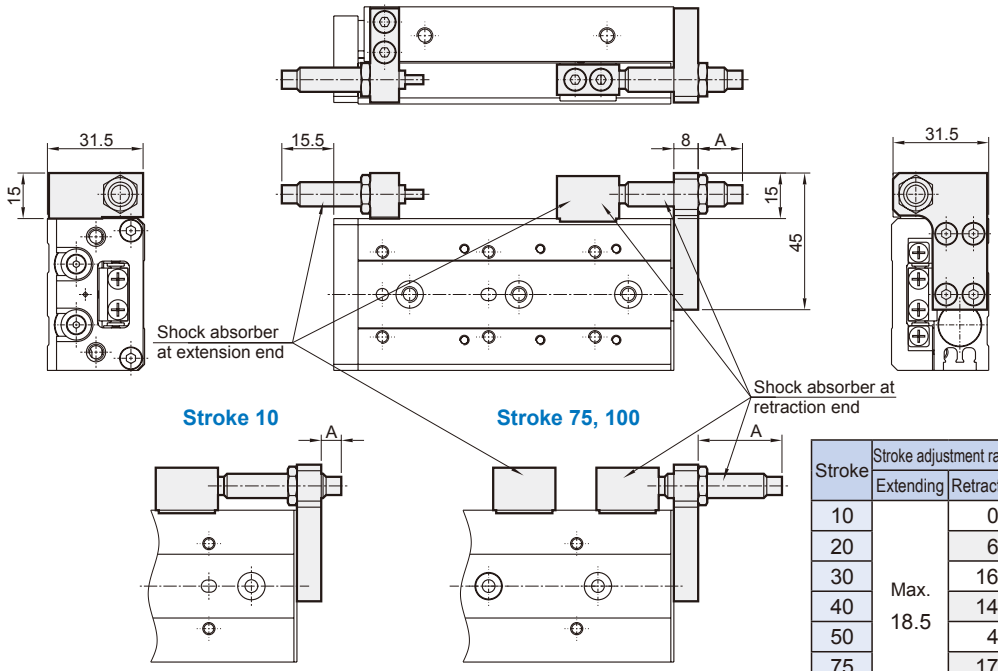

Stroke	Stroke adjustment range		A dimension (Retracted side mounting)
	Extending	Retracting	
10	Max. 18.5	0	5
20		6	15
30		16	25
40		14	23
50		4	13
75		17	26
100		17	26

* Other dimensions not indicated are the same as the basic style.

ø16

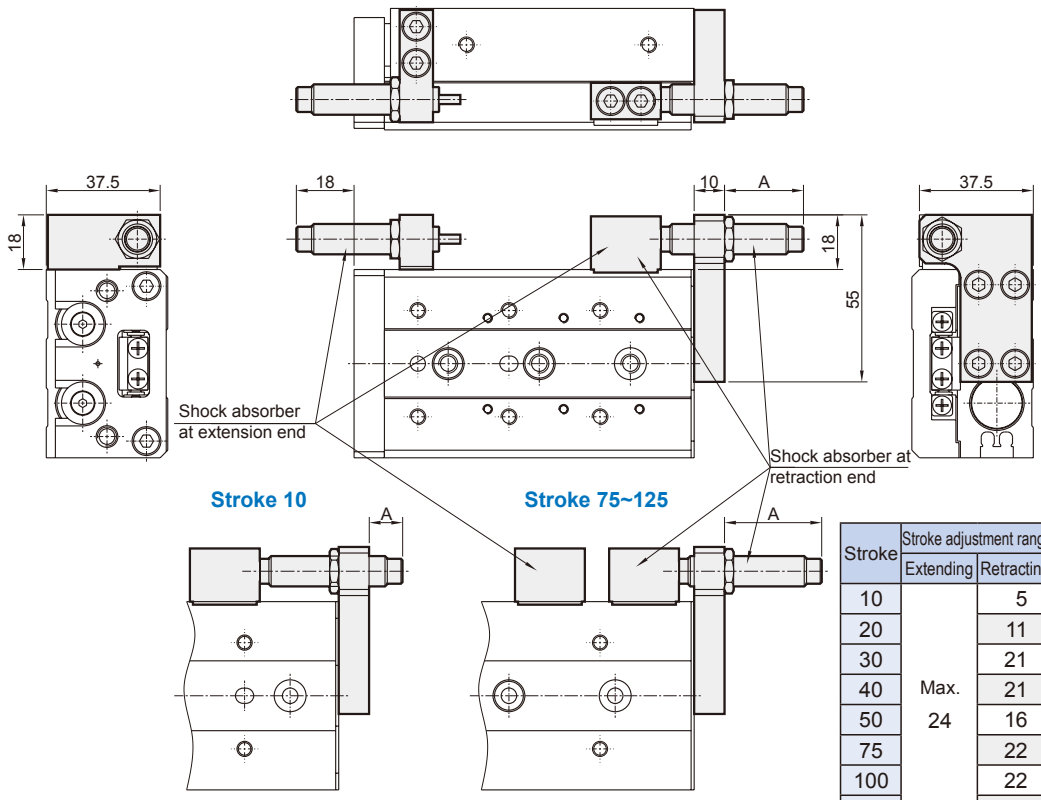

Stroke	Stroke adjustment range		A dimension (Retracted side mounting)
	Extending	Retracting	
10	Max. 24	5	10
20		11	20
30		21	30
40		21	30
50		16	25
75		22	31
100		22	31
125		22	31

* Other dimensions not indicated are the same as the basic style.

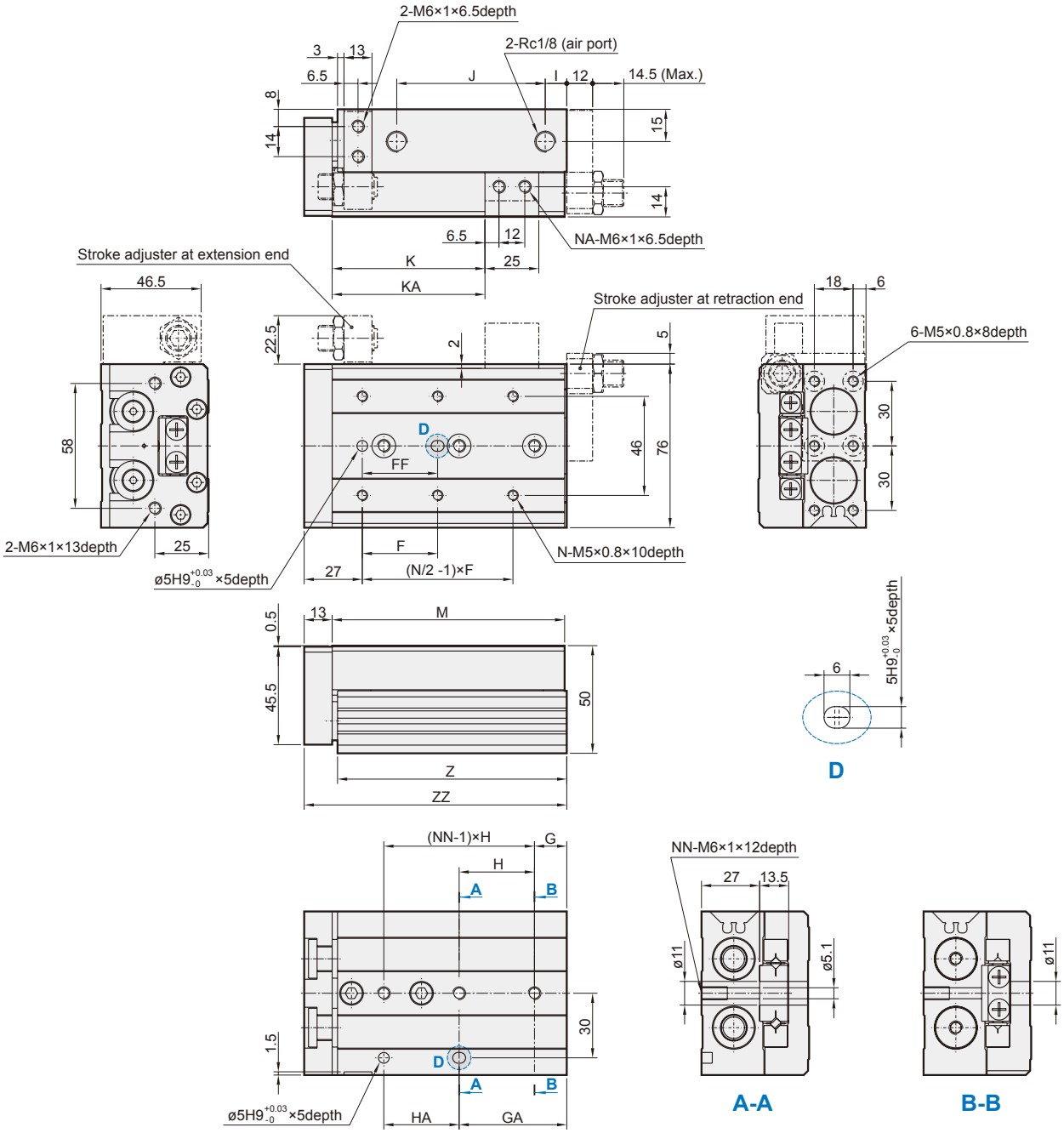

Code / Stroke	F	FF	G	GA	H	HA	I	J	K	KA	M	N	NA	NN	Z	ZZ
10	50	40	15	25	45	35	10	44	31	-	83	4	2	2	81.5	97
20	50	40	15	25	45	35	10	44	41	-	83	4	2	2	81.5	97
30	50	40	15	25	45	35	10	44	51	-	83	4	2	2	81.5	97
40	60	50	15	35	55	35	10	54	61	-	93	4	2	2	91.5	107
50	35	35	15	50	35	35	10	69	71	-	108	6	2	3	106.5	122
75	60	60	19	54	35	70	10	108	96	-	147	6	2	4	145.5	161
100	70	70	37	107	35	70	58	113	121	169	200	6	4	5	198.5	214
125	70	70	41	155	38	76	70	155	146	223	254	8	4	6	252.5	268
150	80	80	19	195	44	88	87	190	171	275	306	8	4	7	304.5	320

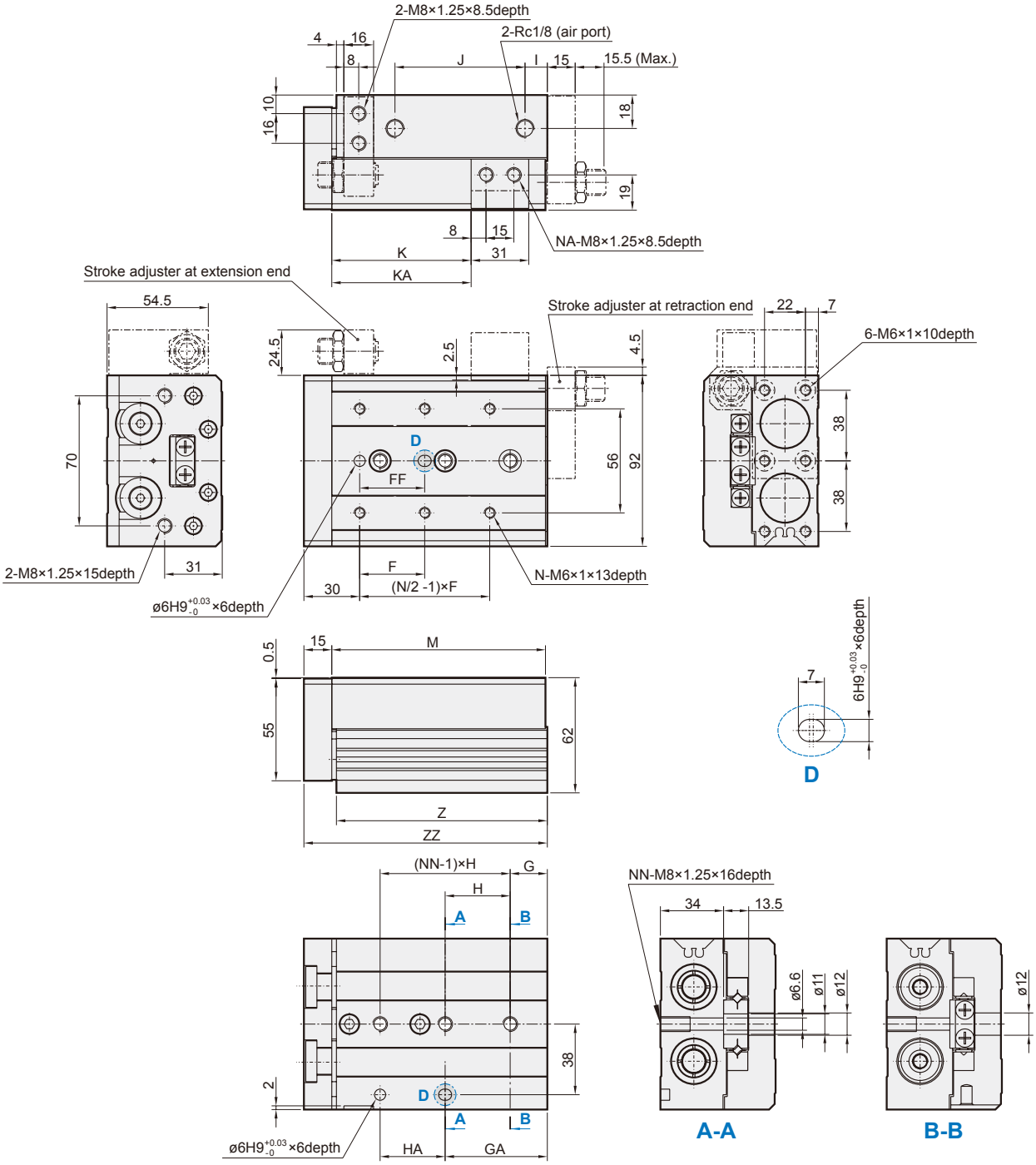

Code / Stroke	F	FF	G	GA	H	HA	I	J	K	KA	M	N	NA	NN	Z	ZZ
10	50	40	22	22	45	45	12	47	35	-	92	4	2	2	90.5	108
20	50	40	22	22	45	45	12	47	45	-	92	4	2	2	90.5	108
30	50	40	22	22	45	45	12	47	55	-	92	4	2	2	90.5	108
40	60	50	22	22	55	55	12	57	65	-	102	4	2	2	100.5	118
50	35	35	20	55	35	35	12	70	75	-	115	6	2	3	113.5	131
75	60	60	26	61	35	70	33	90	100	-	156	6	2	4	154.5	172
100	70	70	32	102	35	70	50	114	125	162	197	6	4	5	195.5	213
125	75	75	40	154	38	76	67	155	150	218	255	8	4	6	253.5	271
150	80	80	30	190	40	80	82	180	175	258	295	8	4	7	293.5	311

ø20

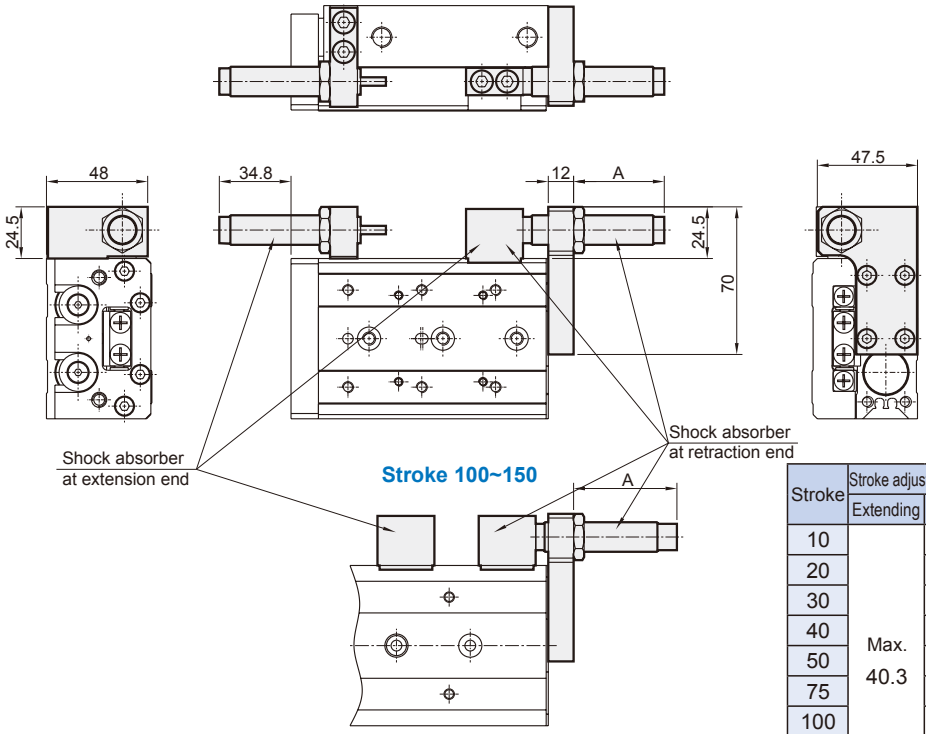

Stroke	Stroke adjustment range		A dimension (Retracted side mounting)
	Extending	Retracting	
10	Max. 40.3	15.8	28.8
20		25.8	38.8
30		35.8	48.8
40		35.8	48.8
50		30.8	43.8
75		16.8	29.8
100		36.8	49.8
125		36.8	49.8
150		36.8	49.8

* Other dimensions not indicated are the same as the basic style.

ø25

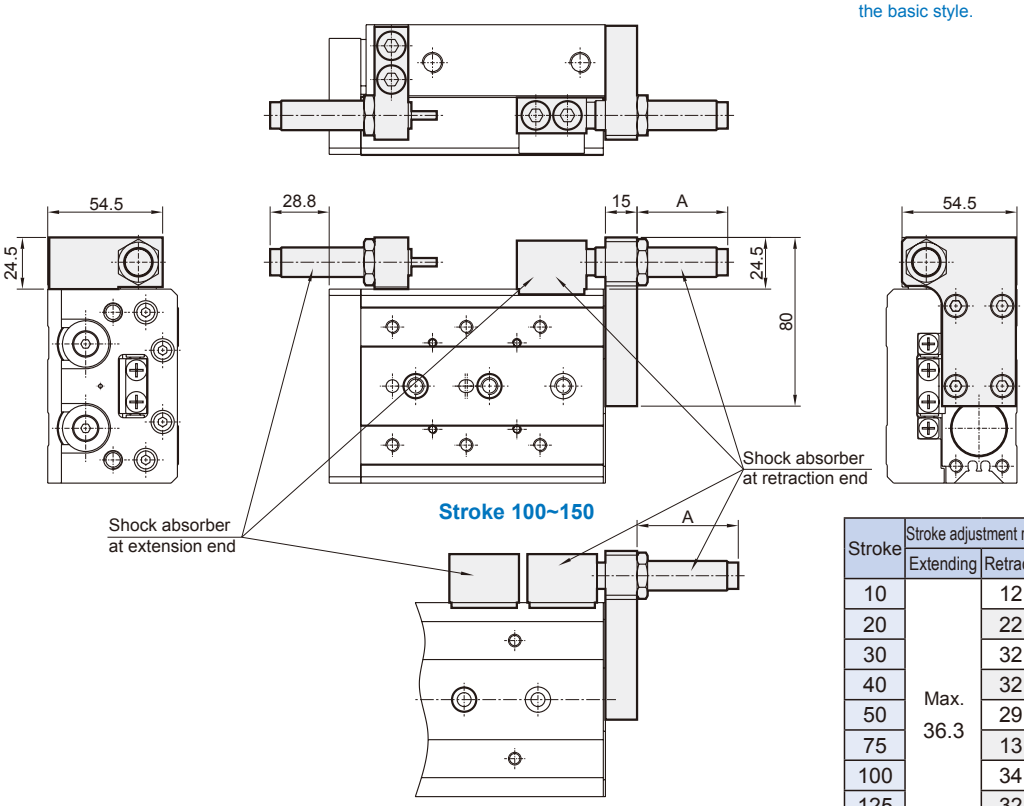

Stroke	Stroke adjustment range		A dimension (Retracted side mounting)
	Extending	Retracting	
10	Max. 36.3	12.8	26.8
20		22.8	36.8
30		32.8	46.8
40		32.8	46.8
50		29.8	43.8
75		13.8	27.8
100		34.8	48.8
125		32.8	46.8
150		32.8	46.8

* Other dimensions not indicated are the same as the basic style.

L

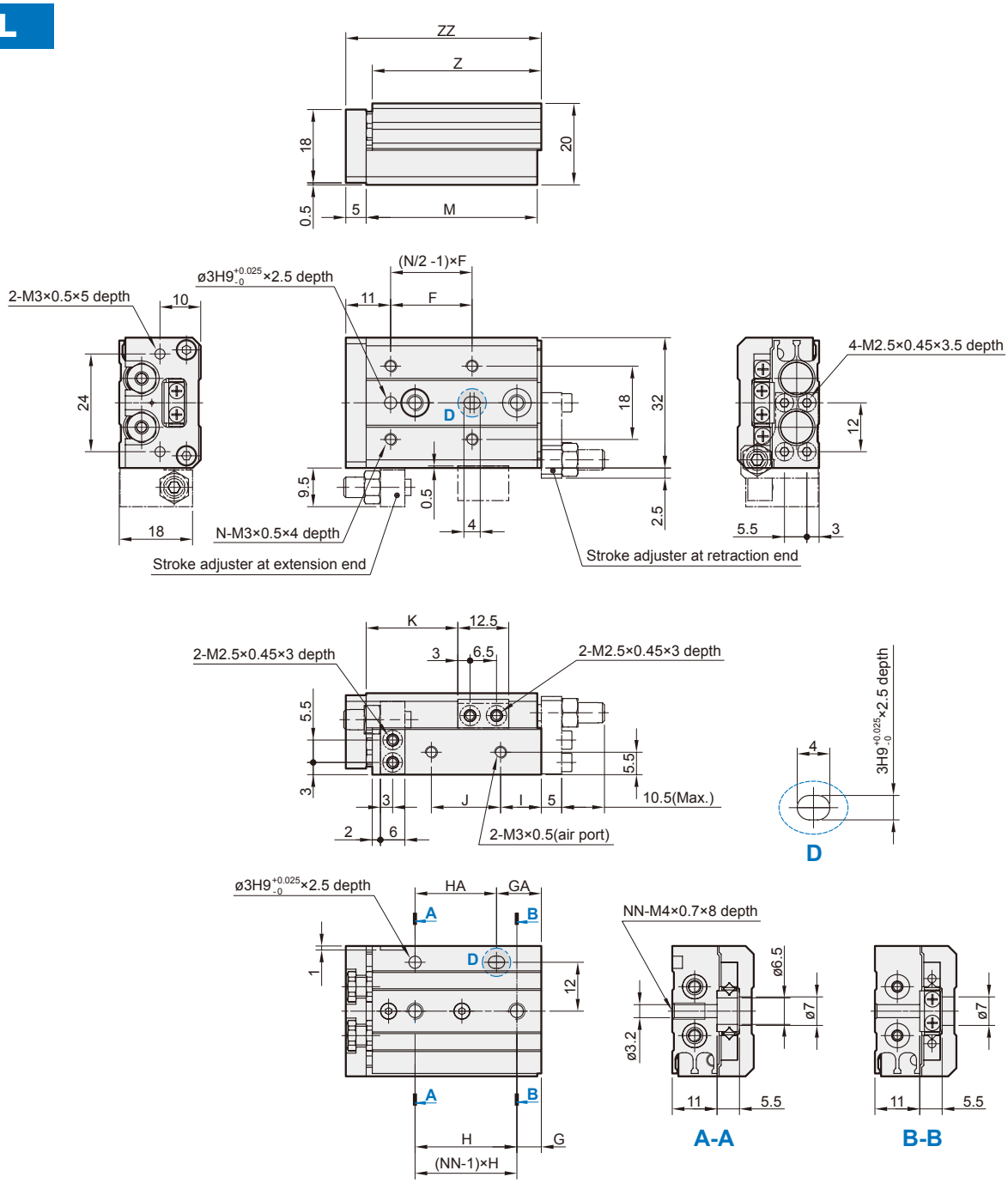

Code / Stroke	F	G	GA	H	HA	I	J	K	M	N	NN	Z	ZZ
10	20	6	11	25	20	10	17	22.5	42	4	2	41.5	48
20	30	6	21	35	20	10	27	32.5	52	4	2	51.5	58
30	20	11	31	20	20	7	40	42.5	62	6	3	61.5	68
40	28	13	43	30	30	19	50	52.5	84	6	3	83.5	90
50	38	17	41	24	48	25	60	62.5	100	6	4	99.5	106

L

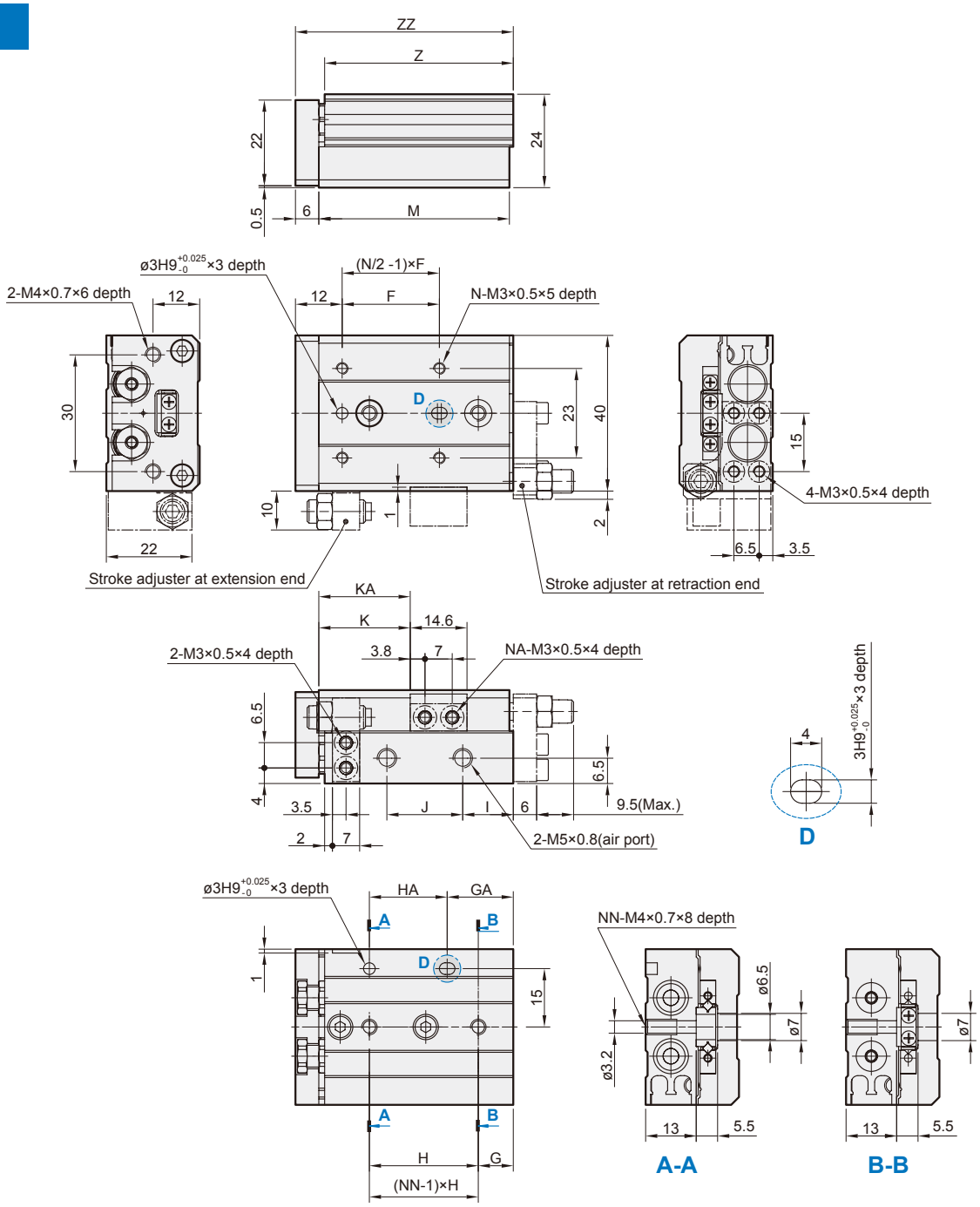

Code / Stroke	F	G	GA	H	HA	I	J	K	KA	M	N	NA	NN	Z	ZZ
10	25	9	17	28	20	13	19.5	23.5	–	49	4	2	2	48.5	56
20	25	12	12	30	30	8.5	29	33.5	–	54	4	2	2	53.5	61
30	40	13	33	20	20	9.5	39	43.5	–	65	4	2	3	64.5	72
40	50	15	43	28	28	10.5	56	53.5	–	83	4	2	3	82.5	90
50	38	20	43	23	46	24.5	60	63.5	82.5	101	6	4	4	100.5	108
75	50	27	83	28	56	38.5	96	88.5	132.5	151	6	4	5	150.5	158

L

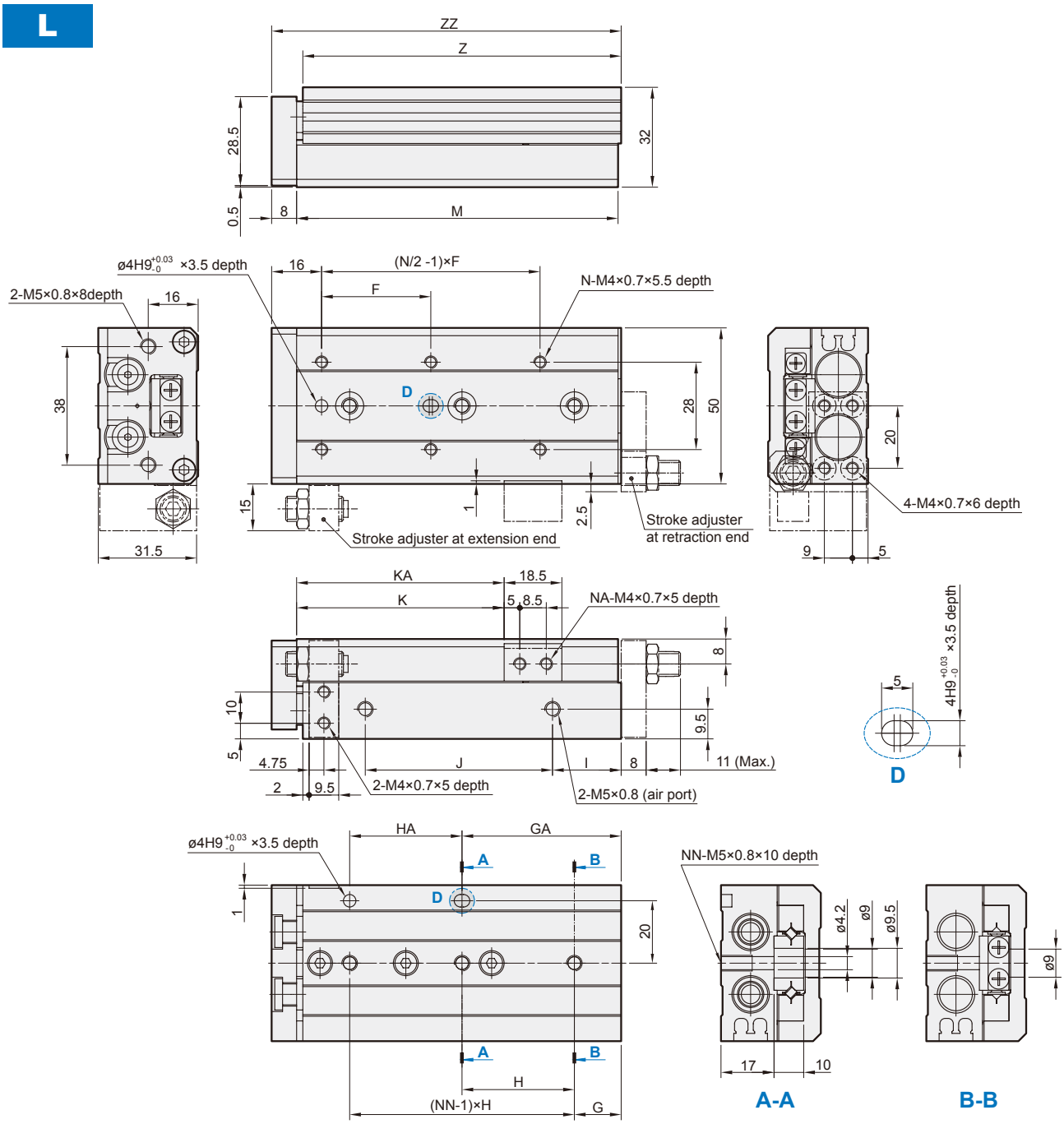

Code / Stroke	F	G	GA	H	HA	I	J	K	KA	M	N	NA	NN	Z	ZZ
10	35	15	15	40	40	10	40	26.5	–	71	4	2	2	70	80
20	35	15	15	40	40	10	40	36.5	–	71	4	2	2	70	80
30	35	15	15	40	40	10	40	46.5	–	71	4	2	2	70	80
40	50	17	42	25	25	10	52	56.5	–	83	4	2	3	82	92
50	35	15	51	36	36	22	60	66.5	–	103	6	2	3	102	112
75	55	25	61	36	72	43	85	91.5	125.5	149	6	4	4	148	158
100	65	35	111	38	76	52	130	116.5	179.5	203	6	4	5	202	212

L

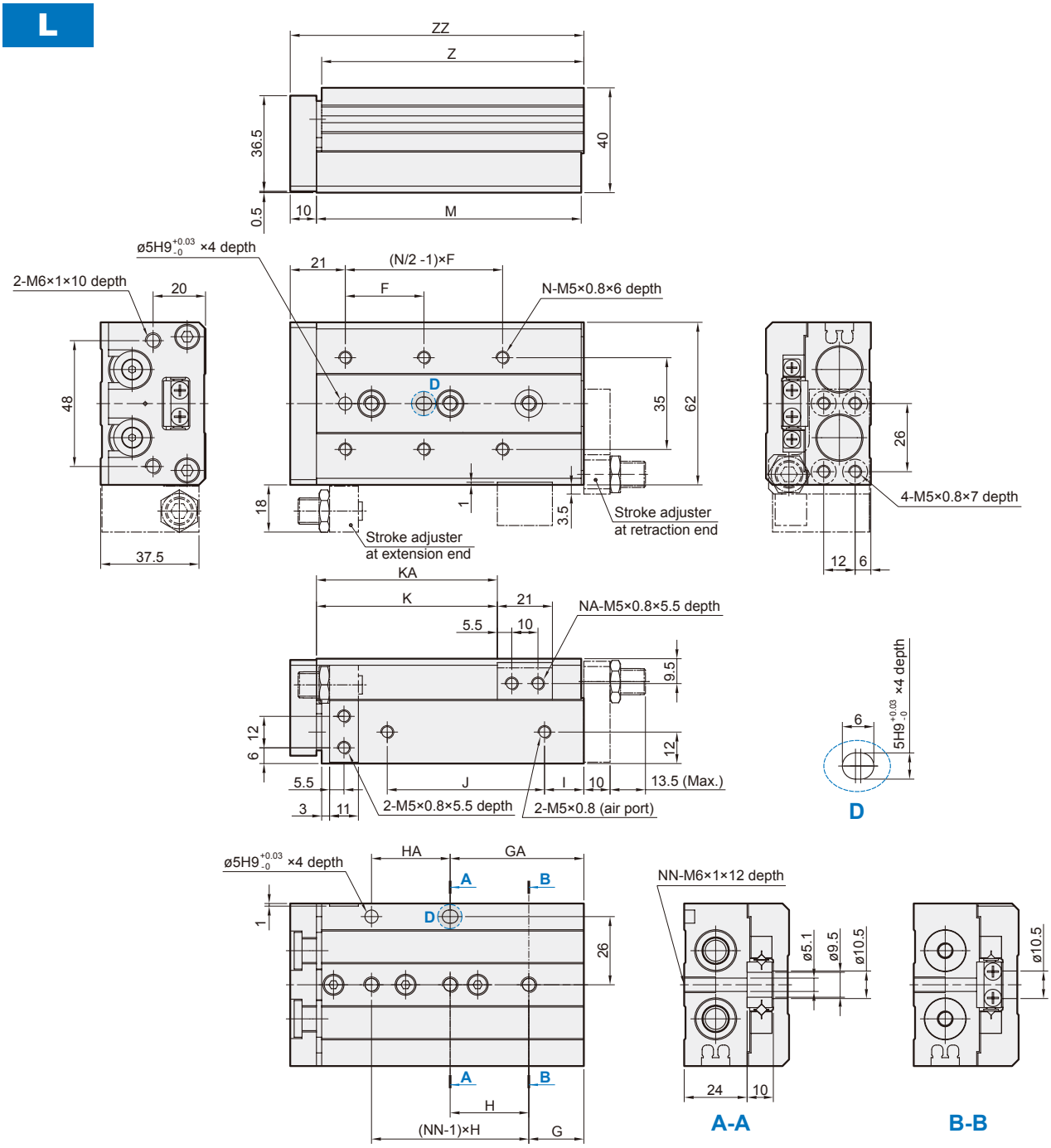

Code / Stroke	F	G	GA	H	HA	I	J	K	KA	M	N	NA	NN	Z	ZZ
10	35	16	16	40	40	10	40	29	–	76	4	2	2	75	87
20	35	16	16	40	40	10	40	39	–	76	4	2	2	75	87
30	35	16	16	40	40	10	40	49	–	76	4	2	2	75	87
40	40	16	16	50	50	10	50	59	–	86	4	2	2	85	97
50	30	21	51	30	30	15	60	69	–	101	6	2	3	100	112
75	55	26	61	35	70	40	85	94	125	151	6	4	4	150	162
100	65	39	109	35	70	55	118	119	173	199	6	4	5	198	210
125	70	19	159	35	70	68	155	144	223	249	8	4	7	248	260

L

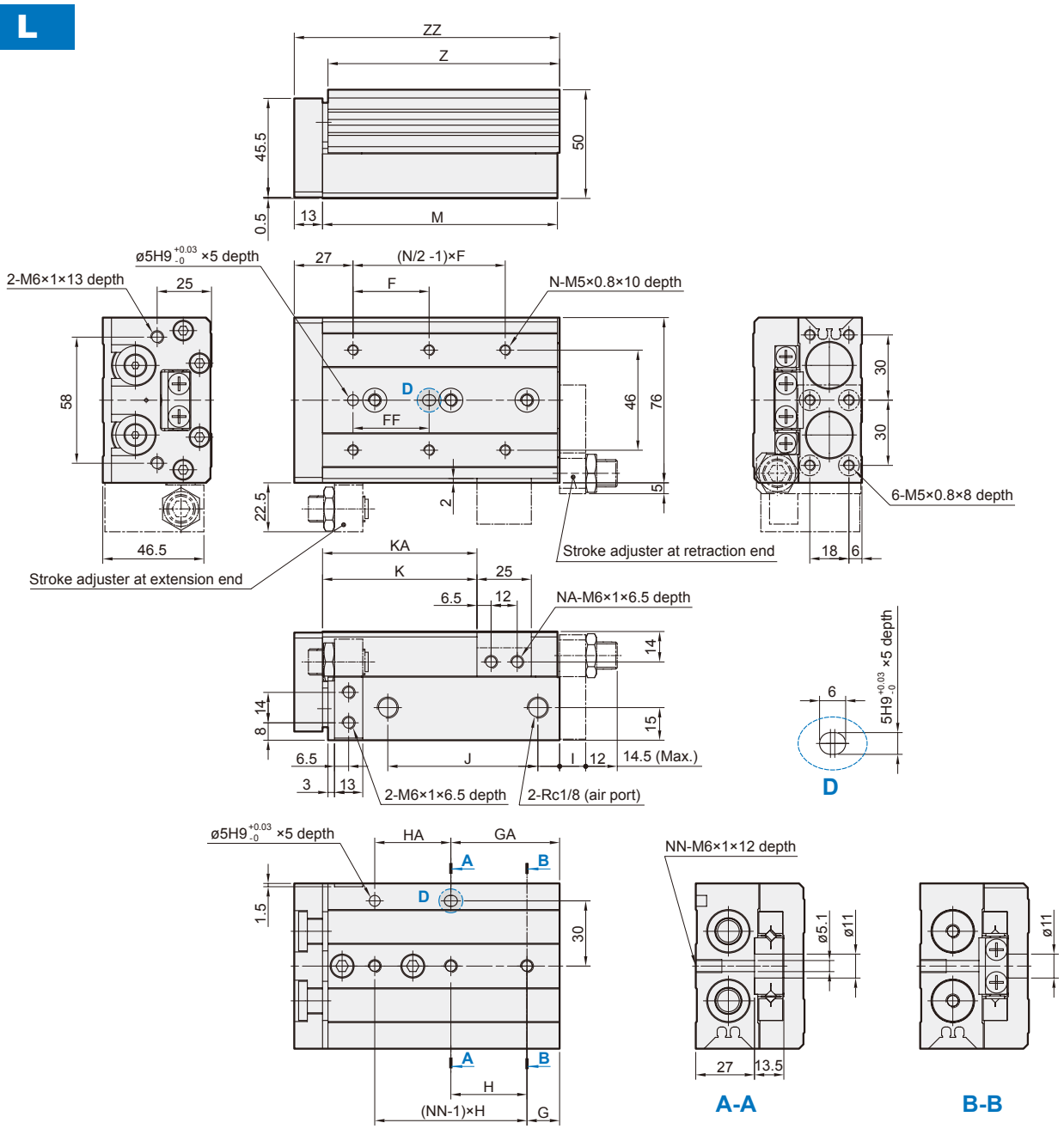

Code / Stroke	F	FF	G	GA	H	HA	I	J	K	KA	M	N	NA	NN	Z	ZZ
10	50	40	15	25	45	35	10	44	31	–	83	4	2	2	81.5	97
20	50	40	15	25	45	35	10	44	41	–	83	4	2	2	81.5	97
30	50	40	15	25	45	35	10	44	51	–	83	4	2	2	81.5	97
40	60	50	15	35	55	35	10	54	61	–	93	4	2	2	91.5	107
50	35	35	15	50	35	35	10	69	71	–	108	6	2	3	106.5	122
75	60	60	19	54	35	70	10	108	96	–	147	6	2	4	145.5	161
100	70	70	37	107	35	70	58	113	121	169	200	6	4	5	198.5	214
125	70	70	41	155	38	76	70	155	146	223	254	8	4	6	252.5	268
150	80	80	19	195	44	88	87	190	171	275	306	8	4	7	304.5	320

L

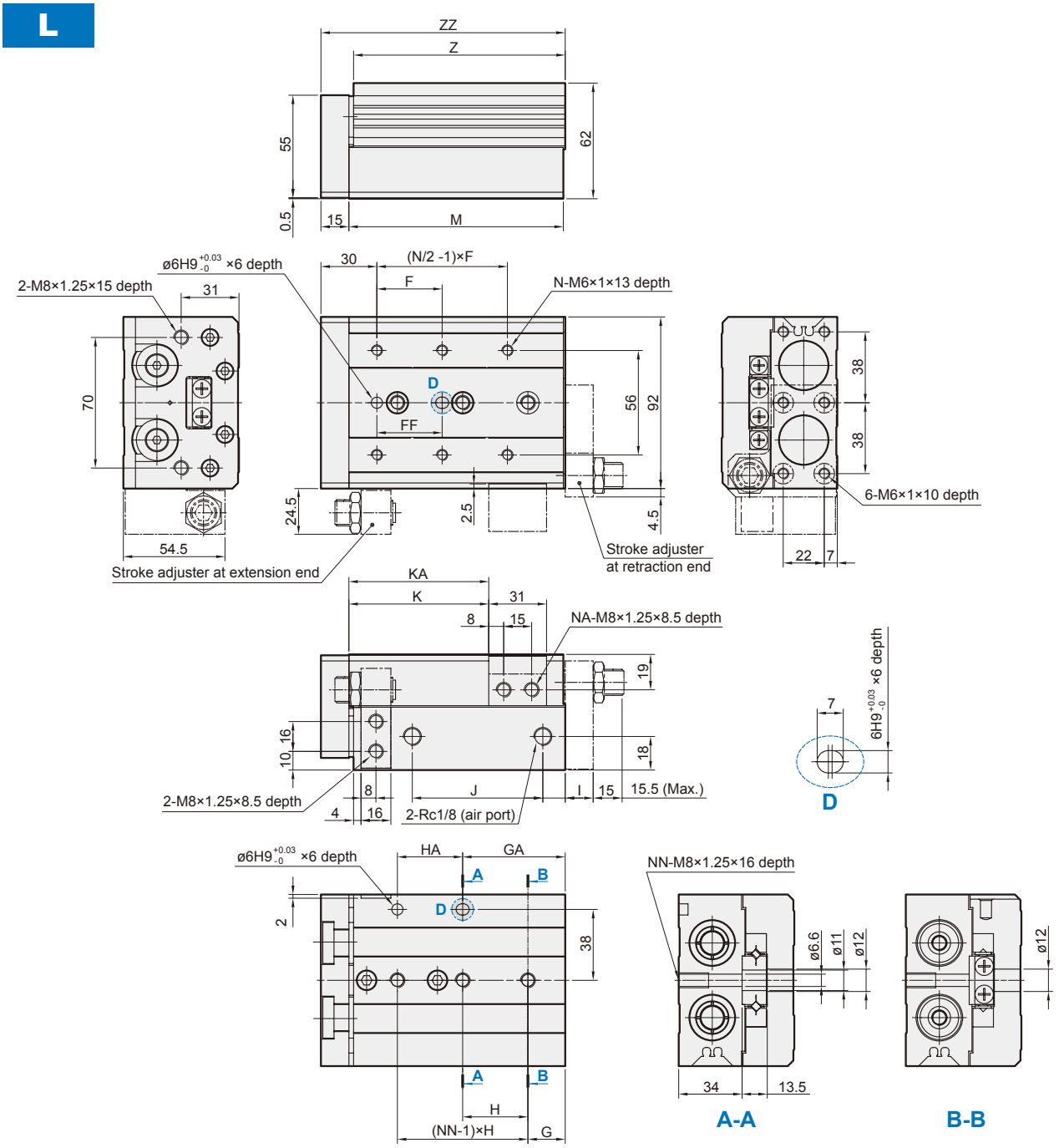

Code / Stroke	F	FF	G	GA	H	HA	I	J	K	KA	M	N	NA	NN	Z	ZZ
10	50	40	22	22	45	45	12	47	35	–	92	4	2	2	90.5	108
20	50	40	22	22	45	45	12	47	45	–	92	4	2	2	90.5	108
30	50	40	22	22	45	45	12	47	55	–	92	4	2	2	90.5	108
40	60	50	22	22	55	55	12	57	65	–	102	4	2	2	100.5	118
50	35	35	20	55	35	35	12	70	75	–	115	6	2	3	113.5	131
75	60	60	26	61	35	70	33	90	100	–	156	6	2	4	154.5	172
100	70	70	32	102	35	70	50	114	125	162	197	6	4	5	195.5	213
125	75	75	40	154	38	76	67	155	150	218	255	8	4	6	253.5	271
150	80	80	30	190	40	80	82	180	175	258	295	8	4	7	293.5	311

Order example of stroke adjuster

MCSS — 20 L — AS — X12

- MODEL
- TUBE I.D.
- Blank: Standard
  L: Symmetric style
- STROKE ADJUSTER
  Blank: Without adjuster
  AS: Adjuster at extension end
  AT: Adjuster at retraction end
  A: Adjuster at both ends
  A2: Adjusting bolt
  BS: Absorber at extension end
  BT: Absorber at retraction end
  B: Absorber at both ends
- ADJUSTABLE RANGE
  (Only for stroke adjuster)
  Blank: 5mm
  X11: 15mm
  X12: 25mm

* **X12** (adjustable range: 25mm) is not available for MCSS-6.
* **X11** and **X12** are not available for shock absorber type.
* Shock absorber is not available on series MCSS-6.

Stroke adjuster at extension end

Mounted to body

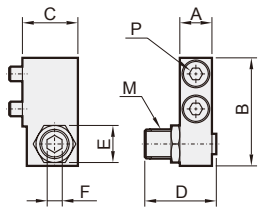

Mounted to table

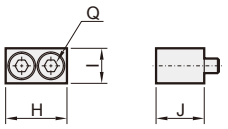

Tube I.D.	Order code	Adjustable stroke range (mm)	Mounted to body								Mounted to table			
			A	B	C	D	E	F	M	P*	H	I	J	Q*
6	MCSS-6-AS	5	6	17.8	10.5	16.5	7	2.5	M5×0.8	M2.5×10	12.5	6	8.5	M2.5×8
	MCSS-6-AS-X11	15				26.5								
8	MCSS-8-AS	5	7	21.5	11	16.5	8	3	M6×1	M3×10	14.6	7	10	M3×10
	MCSS-8-AS-X11	15				26.5								
	MCSS-8-AS-X12	25				36.5								
12	MCSS-12-AS	5	9.5	31	16	20	11	4	M8×1	M4×16	18.5	10	13	M4×12
	MCSS-12-AS-X11	15				30								
	MCSS-12-AS-X12	25				40								
16	MCSS-16-AS	5	11	37	19	24.5	14	5	M10×1	M5×16	21	12	16.5	M5×16
	MCSS-16-AS-X11	15				34.5								
	MCSS-16-AS-X12	25				44.5								
20	MCSS-20-AS	5	13	45.5	24	27.5	17	6	M12×1.25	M6×20	25	13	21	M6×20
	MCSS-20-AS-X11	15				37.5								
	MCSS-20-AS-X12	25				47.5								
25	MCSS-25-AS	5	16	53.5	26.5	32.5	19	6	M14×1.5	M8×25	31	17	25.5	M8×25
	MCSS-25-AS-X11	15				42.5								
	MCSS-25-AS-X12	25				52.5								

* Size of hexagon socket head cap screws.

Stroke adjuster at retraction end

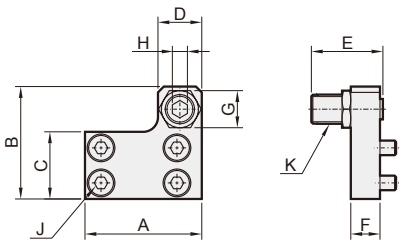

* MCSS-6, 8

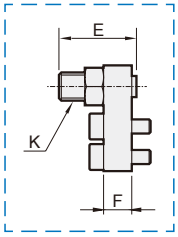

Tube I.D.	Order code	Adjustable stroke range (mm)	A	B	C	D	E	F	G	H	J*	K
6	MCSS-6-AT	5	21	19	10.5	8	16.5	5	7	2.5	M2.5×8	M5×0.8
	MCSS-6-AT-X11	15					26.5					
8	MCSS-8-AT	5	25	22.5	12.5	9	16.5	6	8	3	M3×10	M6×1
	MCSS-8-AT-X11	15					26.5					
	MCSS-8-AT-X12	25					36.5					
12	MCSS-12-AT	5	32	31	18.5	13	20	8	12	4	M4×8	M8×1
	MCSS-12-AT-X11	15					30					
	MCSS-12-AT-X12	25					40					
16	MCSS-16-AT	5	40	38.5	23	15	24.5	10	14	5	M5×10	M10×1
	MCSS-16-AT-X11	15					34.5					
	MCSS-16-AT-X12	25					44.5					
20	MCSS-20-AT	5	50	48	29	21	27.5	12	17	6	M5×12	M12×1.25
	MCSS-20-AT-X11	15					37.5					
	MCSS-20-AT-X12	25					47.5					
25	MCSS-25-AT	5	60	58	35	23	32.5	15	19	6	M6×16	M14×1.5
	MCSS-25-AT-X11	15					42.5					
	MCSS-25-AT-X12	25					52.5					

* Size of hexagon socket head cap screws.

Adjusting bolt

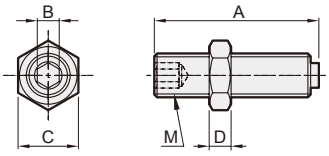

Tube I.D.	Order code	Adjustable stroke range (mm)	A	B	C	D	M
6	MCSS-6-A2	5	16.5	2.5	7	4	M5×0.8
	MCSS-6-A2-X11	15	26.5				
8	MCSS-8-A2	5	16.5	3	8	4	M6×1
	MCSS-8-A2-X11	15	26.5				
	MCSS-8-A2-X12	25	36.5				
12	MCSS-12-A2	5	20	4	11	4	M8×1
	MCSS-12-A2-X11	15	30				
	MCSS-12-A2-X12	25	40				
16	MCSS-16-A2	5	24.5	5	14	4	M10×1
	MCSS-16-A2-X11	15	34.5				
	MCSS-16-A2-X12	25	44.5				
20	MCSS-20-A2	5	27.5	6	17	5	M12×1.25
	MCSS-20-A2-X11	15	37.5				
	MCSS-20-A2-X12	25	47.5				
25	MCSS-25-A2	5	32.5	6	19	6	M14×1.5
	MCSS-25-A2-X11	15	42.5				
	MCSS-25-A2-X12	25	52.5				

Stroke adjuster at extension end

Mounted to body

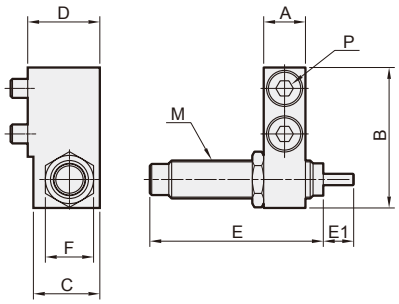

Mounted to table

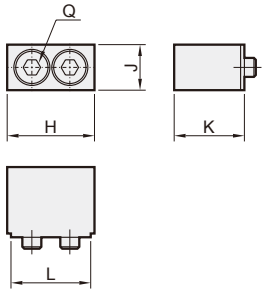

Tube I.D.	Order code	Mounted to body										Mounted to table				
		A	B	C	D	E	E1	F	M		P*	H	J	K	L	Q*
8	MCSS-8-BS	7	23	14	15.5	38.5	6	11	M8×1	MDSC-0806-3-N	M3×16	16.6	7	15.5	14.6	M3×16
12	MCSS-12-BS	9.5	31	14.5	16	38.5	6	11	M8×1	MDSC-0806-3-N	M4×16	20.5	10	15	18.5	M4×12
16	MCSS-16-BS	11	37	17.5	19	45.5	8	12.7	M10×1	MDSC-1008-3-N	M5×16	23	12	18.5	21	M5×16
20	MCSS-20-BS	13	45.5	23.5	26	67.5	12	19	M14×1.5	MDSC-1412-3-N	M6×25	27	13	25.5	25	M6×25
25	MCSS-25-BS	16	53.5	23.5	26.5	67.5	12	19	M14×1.5	MDSC-1412-3-N	M8×25	33	17	25.5	31	M8×25

* Size of hexagon socket head cap screws.

Stroke adjuster at retraction end

Mounted to body

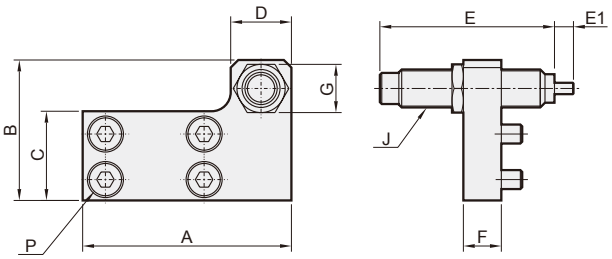

Mounted to table

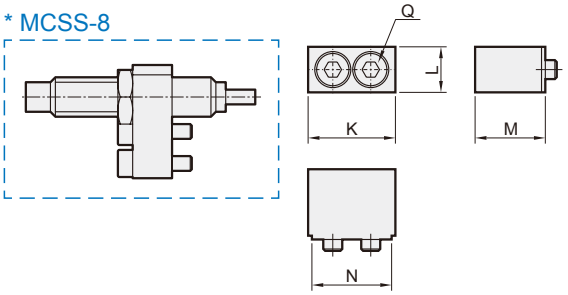

Tube I.D.	Order code	Mounted to body											Mounted to table				
		A	B	C	D	E	E1	F	G	J		P*	K	L	M	N	Q*
8	MCSS-8-BT	38	23	12.5	14	38.5	6	8	12	M8×1	MDSC-0806-3-N	M3×12	16.6	7	15.5	14.6	M3×16
12	MCSS-12-BT	45	31	18	14	38.5	6	8	11	M8×1	MDSC-0806-3-N	M4×8	20.5	10	15	18.5	M4×12
16	MCSS-16-BT	55	37	23.5	16	45.5	8	10	12.7	M10×1	MDSC-1008-3-N	M5×10	23	12	18.5	21	M5×16
20	MCSS-20-BT	70	47	29	23	67.5	12	12	19	M14×1.5	MDSC-1412-3-N	M5×12	27	13	25.5	25	M6×25
25	MCSS-25-BT	80	54	35	23	67.5	12	15	19	M14×1.5	MDSC-1412-3-N	M6×16	33	17	25.5	31	M8×25

* Size of hexagon socket head cap screws.